Emona net*TIMS™ - TIMS™ Experiments via LAN & Internet

The Convenience of Student Telecommunications and Signals & Systems Experiments from Home or Anywhere at a Distance

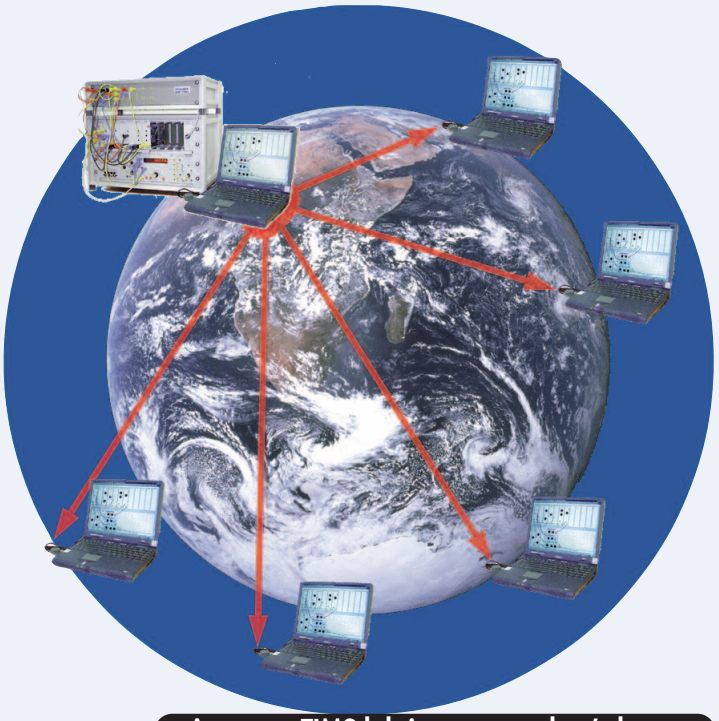

A remote TIMS lab in every student's home

Watch the net*TIMS ***video*** and and log onto a ***live*** net*TIMS experiment !

Go to **www.webtims.com**

net*TIMS

EMONA INSTRUMENTS
www.webtims.com

net*TIMS for TIMS EXPERIMENTS via the school LAN and the Internet

Emona net*TIMS offers real TIMS telecommunications and signals & systems hardware experiments, delivered simultaneously to multiple students across LAN & Internet, in real-time.

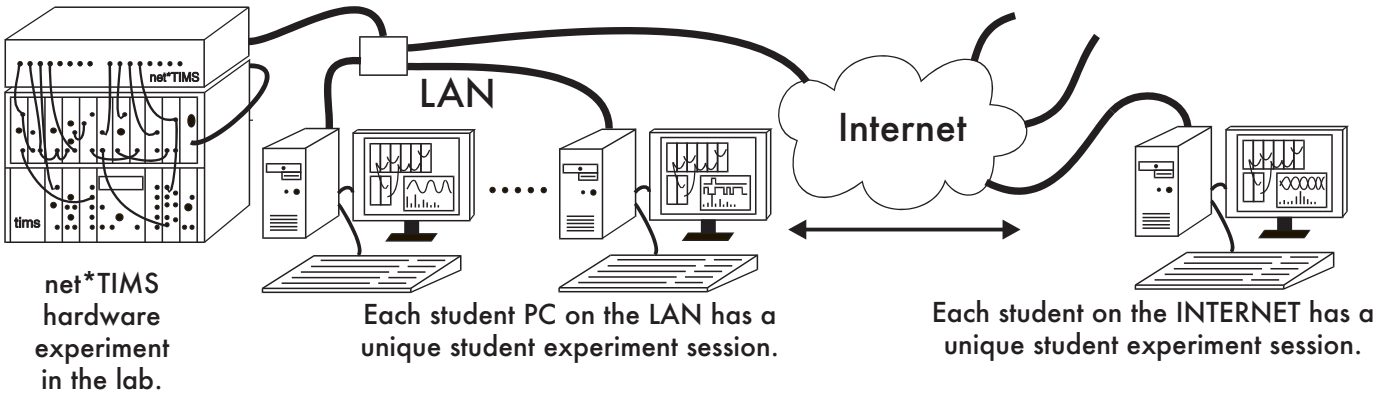

- **Students control real TIMS hardware from their PC and obtain immediate PC-scope display of the real signals**
- **Remote control of hardware via GUI**
- **Flexible experiment patching**
- **Fault insertion capability for student debugging**
- **24/7 access to real TIMS hardware experiments via browser/client**
- **Real-time logging of student experiment progress and access**
- **Flexible, fast experiment authoring using TutorTIMS simulation package**

EMONA net*TIMS

net*TIMS allows professors to set-up real TIMS telecommunications experiments in their own laboratory, which students can then **access and control from within the lab and at a distance**, to carry out the experiments.

net*TIMS-enabled modules have switches and potentiometers which are remotely controlled via Ethernet. The net*TIMS-enabled modules are plugged into a standard Emona TIMS-301 System Unit and are patched to the net*TIMS Server, which is **connected to the LAN/Internet via an Ethernet port**.

The GUI at the user PC mimics the experiment front panels and displays acquired real signals, using a digital 2 channel oscilloscope from 8 different points in the experiment for each channel. 4 trigger points are also available.

All waveforms can be viewed in both the time and frequency domain.

SIMPLE BROWSER LOG-ON

A user logs on to the net*TIMS Server **using their web browser**. They receive a JAVA-based client screen, as shown to the right, corresponding to the particular experiment set up on the net*TIMS System.

Why consider remote controlled hardware experiments instead of lower cost simulation software?

Because students do learn better: they find the results obtained from hardware systems more believable.

Experience shows that students don't believe and question the validity of unexpected results obtained from simulation software.

"Hardware is real"

The student can simultaneously access other course material provided by the professor and also transfer actual experimental results between the net*TIMS screen and other applications to create Lab reports.

The user can switch, insert or by-pass hardware modules in the experiment, as set-up by the professor, for multi-stage experiments.

MULTI-USER

The net*TIMS Server manages a **multi-user environment**, allowing several students, each at a different location, to be logged onto the same net*TIMS Server and independently carrying out their own session of the same experiment.

COURSE MANAGEMENT

The net*TIMS Server provides gate-keeping access and a log of all student activities. The professor can manage the net*TIMS Server from a password protected administration page via their browser.

Emona net*TIMS SYSTEM OVERVIEW

net*TIMS SERVER

A web server unit which ' serves' the net*TIMS EXPERIMENT SCREEN to each user ' client' software, as well as housing the digital scope and multiplexer used to capture actual signals for display.

net*TIMS Scope Inputs

Real, multichannel digital storage scope. Captures users' waveforms.

Ethernet Port

The ethernet port at the rear of the net*TIMS Server provides user access via PC, or LAN, or Internet.

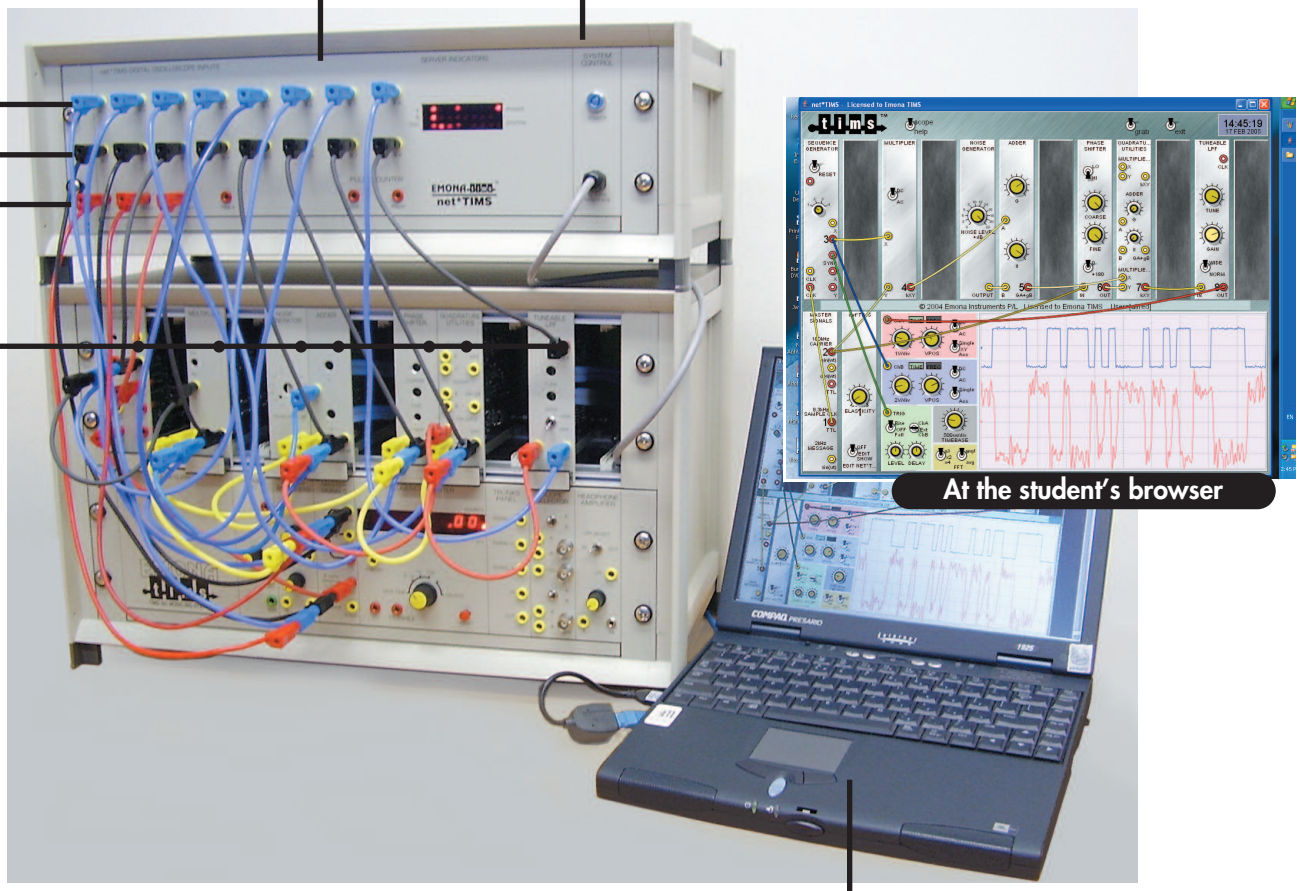

net*TIMS Enabled Plug-in Modules

Hardware modules are patched together following exactly the experiment as displayed by the net*TIMS CLIENT software. All knobs and switches are controlled on-screen by the student via the net*TIMS CLIENT running on their PC.

Professor's PC

Connected via ethernet port to the LAN, to access the net*TIMS experiment and also the Server' s ADMIN pages.

HOW TO BUILD TIMS & net*TIMS TELECOMMUNICATIONS EXPERIMENTS

Students use exactly the same approach to building telecommunications experiments in all Emona TIMS hardware and Emona TutorTIMS software.

$$x_p(t).\cos\omega_c t + x_q(t).\sin\omega_c t = QPSK$$

where $x_p(t)$ and $x_q(t)$ are alternate elements of a digital sequence.

START WITH MATH OR THEORY

Telecommunications text books are a source of equations and theories. This is the starting point for all TIMS experiments.

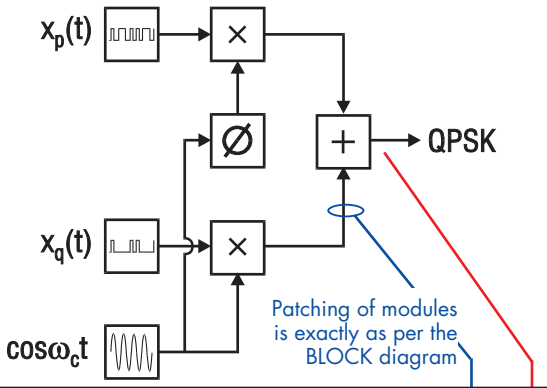

REPRESENT IT AS A BLOCK DIAGRAM

In telecommunications, Math and Theory is always expressed in the universal language of BLOCK DIAGRAMS.

Telecommunications engineers make sense of math and theory through BLOCK DIAGRAMS.

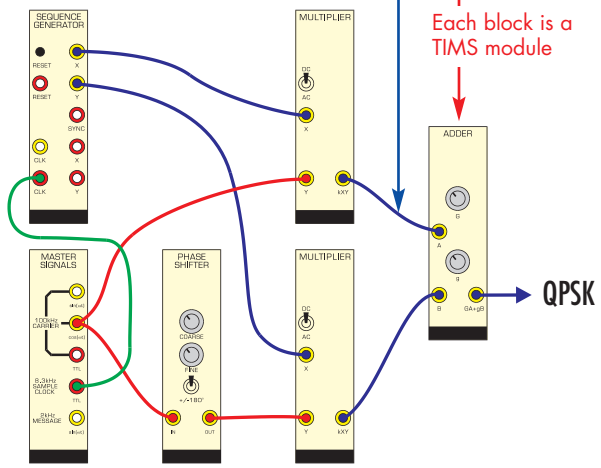

BUILD IT USING TIMS & net*TIMS MODULES

TIMS & net*TIMS both realise telecommunications BLOCK DIAGRAMS. TIMS realises block diagrams with real circuits.

Available from:

Emona Instruments Pty Ltd
78 Parramatta Road
Camperdown NSW 2050 AUSTRALIA
Tel: +61-2-9519-3933 Fax: +61-2-9550-1378
URL: www.tims.com.au
Email: sales@tims.com.au